Canon

KT20x5B KRS

HDGC

Canon's Philosophy :
Canon has always developed new technology with four basic philosophies, "High Quality of Picture", "Ease of Operation", "High Specification" and "Minimize Environmental Impact". Canon's HDTV lenses are, so to speak, a compilation of our basic philosophies.
Now, Canon adds a new concept to the HDTV lenses by launching the new HDgc Series.

KT20x5B KRS

Canon's Philosophy:

Canon has always developed new technology with four basic philosophies, "High Quality of Picture", "Ease of Operation", "High Specification" and "Minimize Environmental Impact". Canon's HDTV lenses are, so to speak, a compilation of our basic philosophies. Now, Canon adds a new concept to the HDTV lenses by launching the new HDgc Series.

Canon's New HDgc Series

Concept of HDgc Series

Corresponding to the popularity of digital High Definition broadcasting and diversity of HDTV equipment, Canon has added a new series to its HDTV lens line up, the HDgc series. The new HDgc series supports the emergence of an important new generation of cost-effective HD acquisition systems. Adopting the advantages created by Canon's unique technology, the new HDgc lenses exhibit high MTF, high resolution and high contrast from the center of the image to its extreme edges, meanwhile maintaining its compact size and weight.

Another important policy of Canon's is not to pollute the earth and the HDgc series succeeded in excluding harmful substances such as cadmium, PBBS, PBDPE or mercury from the mechanical parts, and at the same time incorporating lead free glass and reducing the amount of hazardous substances used in electrical parts.

Meet Canon's new HDgc series lenses, a compilation of Canon's advanced technologies.

Other Features of KT20x5B KRS

Shuttle Shot Function

Shuttle Shot is a Canon Exclusive Technology that enhances production capabilities. At the touch of a button, this feature allows the operator to zoom back and forth instantly between any two positions. It can be used to zoom to the telephoto position to check focus and then return instantly to the original position or you can "shuttle" between any two zoom positions at any time.

SHUTTLE SHOT

Compact Design

The KT20x is smaller in size and lighter in weight compared to the traditional BCTV lenses, which allows ease of use when carried on a shoulder.

Advanced Drive Unit

The new ergonomically designed drive unit achieves an ideal balance and comfort by having it tilt to an ideal angle. In addition, the size of the unit has been minimized to comfortably fit in the palm of one's hand. Overall, it improves the feeling of unity between the user and the lens. Moreover, the drive unit is equipped with a Shuttle Shot Function while offering a maximum zoom speed of 1.2sec from wide end to tele end.

New Ergonomic Drive Unit

The new ergonomically designed drive unit achieves an ideal balance and comfort by having it tilt to an angle. In addition, the size of the unit has been minimized to comfortably fit in the palm of one's hand. Overall, it improves the feeling of unity between the user and the lens.

Maximum Zoom Speed 1.2sec. from wide end to tele end.

Shuttle Shot Switch

DIP Switch

Grip Support
Allows a user to securely grip the drive unit without pressing on the VTR or Shuttle Shot buttons.

Ribbed Surface
The ribbed surface on the bottom of the drive unit provides better handling control.

Ecological Design

The HDgc series has succeeded in reducing the use of harmful and hazardous substances that could pollute the environment.

Enhanced Macro Function
Allows from the lens front an M.O.D. of 10mm.

New HDgc Logo

Short M.O.D. 0.9m

Ecological Design

Compact Design
Only 171.2mm / 1.19kg

High Water / Dust Resistant Design

High-level Optical Performance

- **Reduced Chromatic Aberrations**
- **High and Flat MTF**
- **Countermeasures Against Ghosting and Flares**

SPECIFICATIONS

KT20x5B KRS

Image Format Covered	1/3 inch	
	4:3	16:9
Zoom Ratio	20X	
Range of Focal Length	5 – 100mm	
Maximum Relative Aperture	1:1.4 at 5.0 – 90.3mm 1:1.55 at 100mm	
Angular Field of View	48.1° x 37.0° 2.6° x 1.9°	51.9° x 30.6° 2.8° x 1.6°
Minimum object Distance (M.O.D.)	0.9m (10mm with Macro)	
Object Demensions at M.O.D.	75.2 x 56.4cm at 5.0mm 3.9 x 2.9cm at 100mm	82.1 x 46.2cm at 5.0mm 4.2 x 2.4cm at 100mm
Approx. Size	W x H x L = 163.3 x 103 x 171.2 mm	
Approx. Mass	1.19kg	

DIMENSIONS

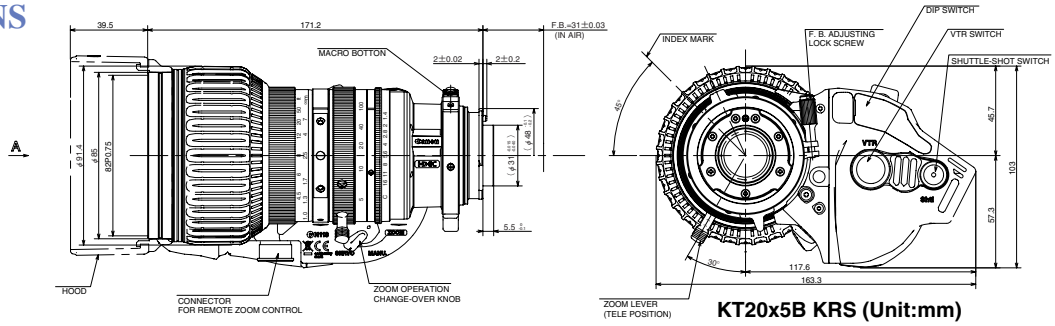

KT20x5B KRS (Unit:mm)

LENS CONTROLLERS

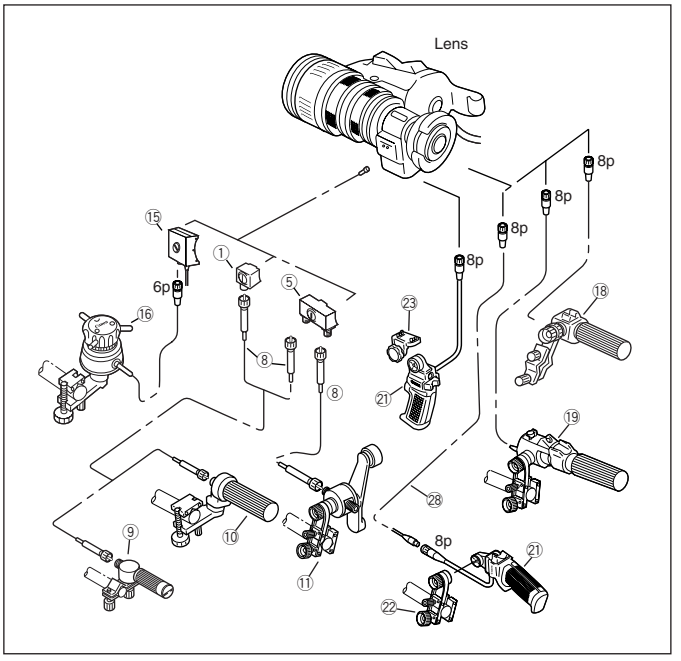

#	Unit	Description	CODE
①	FM-12	Flex Focus Module	1824A012
⑤	FM-70	Flex Dual Module	0002T071
⑧	FC-40	Flex Cable	1824A010
⑨	FFC-15	Flex Focus Controller	1824A024
⑩	FFC-200	Flex Zoom Controller	1824A014
⑪	FZC-100	Flex Zoom Controller	1824A021
⑮	FPM-77	Focus Positional Servo Module	1824A020
⑯	FPD-400	Focus Positional Demand	1824A018
⑱	ZSD-15M II	Zoom Demand	1824A071
⑲	ZSD-300M	Zoom Demand	1824A067
㉑	ZSG-200M	Zoom Servo Grip	1824A069
㉒	CR-10	Clamper	1824A007
㉓	GA-70	Grip Adapter	0018T531
㉘	EC-80	Zoom Extension Cable (8P)	1824A009

OPTICAL ACCESSORIES

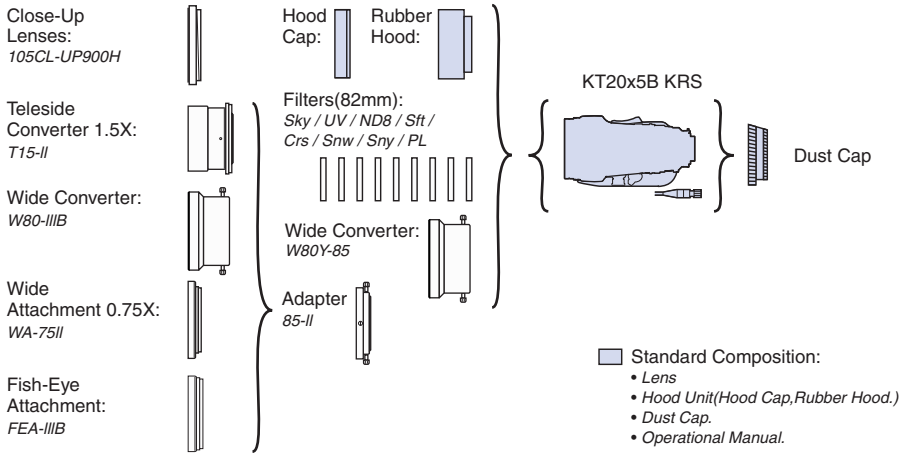

MODEL	CODE
82CL-UP800H	1823A041
82CL-UP1300H	1823A042
Teleside Con T15-II	1823A005
Teleside Con T15HD*	1823A098
Wide Con W80-IIIB	1823A006
Wide Con W80HD*	1823A094
Wide Attach WA-75II	1823A008
Wide Attach WA75HD*	1823A095
Fish-Eye FEA-IIIB	1824A011
Adaptor85II	1824A002
UV / 82mm	1823A030
Sky / 82mm	1823A031
Crs / 82mm	1823A032
Sny / 82mm	1823A033
Snw / 82mm	1823A034
ND4 / 82mm	1823A035
ND8 / 82mm	1823A036
Sft / 82mm	1823A037
PL / 82mm	1823A038
W80Y-85	1823A009

* The HD quality accessories offer higher optical performance.

North & South America

Canon U.S.A., Inc.
Broadcast and Communications Div. (Headquarters)
65 Challenger Road, Ridgefield Park, NJ 07660
Tel:(201)807-3300 / (800)321-4388
Fax:(201)807-3333
Email:bctv@cusa.canon.com
http://www.canonbroadcast.com/

Chicago
100 Park Blvd. Itasca, IL 60143
Tel:(630)250-6236 Fax:(630)250-0399

Atlanta
5625 Oakbrook Pkwy. Norcross, GA 30093
Tel:(770)849-7890 Fax:(770)849-7888

Los Angeles
15955 Alton Parkway Irvine, CA 92618
Tel:(949)753-4330 Fax:(949)753-4337

Dallas
3200 Regent Blvd. Irving, TX 75063
Tel:(972)409-8871 Fax:(972)409-8869

Latin America
Tel:(954)349-6975 Fax:(201)807-3333

Canada
Canon Canada, Inc.
Broadcast and Communications Div.
6390 Dixie Road
Mississauga, Ontario, L5T 1P7, Canada
Tel:(905)795-2012 Fax:(905)795-2140

Europe/Africa/Middle East

Canon Europa N.V.
Broadcast and Communications Div.
Bovenkerkerweg 59-61
1185 XB Amstelveen
Tel:+31(0)20-5458905 Fax:+31(0)20-5458203
Email:tvprod@canon-europe.com
http://www.canon-europe.com/tv-products

Australia

Canon Australia Pty. Ltd.
Optical Products Division
1 Thomas Holt Drive, North Ryde, NSW 2113, Australia
Tel:+61(0)2-9805-2000 Fax:+61(0)2-9805-2444

China

Canon (China) Co., Ltd.
Optical Products Division
15F Jinbao Building No.89 Jinbao Street
Dongcheng District, Beijing 100005, China
Tel:86-10-85139999 Fax:86-10-85139902
http://www.canon.com.cn

Asia/Japan

Canon Inc.(Broadcast Equipment Group)
23-10, Kiyohara-Kogyo-Danchi, Utsunomiya-shi,
Tochigi-ken, 321-3298, Japan
Tel:+81(0)28-667-8669 Fax:+81(0)28-667-8672
http://www.canon.com/bctv/

http://www.canon.com/bctv

Canon

Specifications subject to change without notice

PUB NO.0065W190 0806SZ3 PRINTED IN JAPAN